Cambridge Assessment International Education

Cambridge International AS & A Level

CANDIDATE NAME

CENTRE NUMBER

CANDIDATE NUMBER

1937336578

PHYSICS **9702/52**

Paper 5 Planning, Analysis and Evaluation **May/June 2021**

1 hour 15 minutes

You must answer on the question paper.

No additional materials are needed.

INSTRUCTIONS

- Answer **all** questions.
- Use a black or dark blue pen. You may use an HB pencil for any diagrams or graphs.
- Write your name, centre number and candidate number in the boxes at the top of the page.
- Write your answer to each question in the space provided.
- Do **not** use an erasable pen or correction fluid.
- Do **not** write on any bar codes.
- You may use a calculator.
- You should show all your working and use appropriate units.

INFORMATION

- The total mark for this paper is 30.
- The number of marks for each question or part question is shown in brackets [ ].

This document has **8** pages.

DC (DH/CB) 200115/2
© UCLES 2021

[Turn over

PapaCambridge

1 A student investigates the heating of a solid metal cylinder. Fig. 1.1 shows the cylinder of cross-sectional area A and height h.

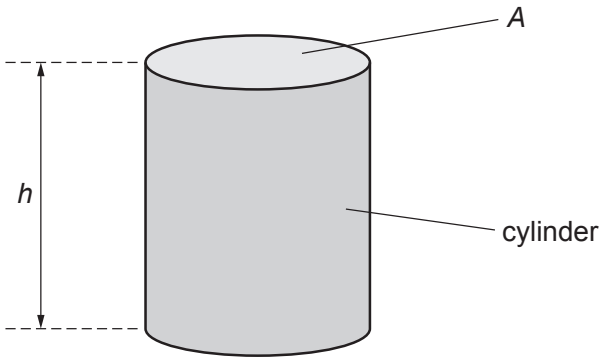

Fig. 1.1

The student places the cylinder and an electrical heater in a beaker of water. The electrical heater is switched on and the student measures the time t for the temperature of the water to increase by $\Delta\theta$.

A number of cylinders of the same material but with different cross-sectional areas are available.

It is suggested that the relationship between t and A is

$$Pt = AhW\Delta\theta + Z\Delta\theta$$

where P is the power of the heater and W and Z are constants.

Design a laboratory experiment to test the relationship between t and A.
Explain how your results could be used to determine values for W and Z.

You should draw a diagram, on page 3, showing the arrangement of your equipment.
In your account you should pay particular attention to:

- the procedure to be followed
- the measurements to be taken
- the control of variables
- the analysis of the data
- any safety precautions to be taken.

© UCLES 2021

PapaCambridge

Diagram

PapaCambridge

[15]

PapaCambridge

2 A student investigates the current in a circuit containing a cell, as shown in Fig. 2.1.

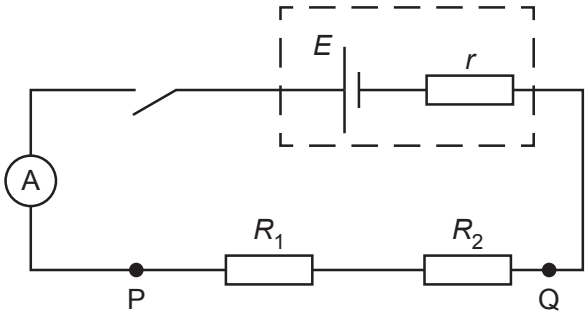

Fig. 2.1

The student connects two resistors of resistances R_1 and R_2 between P and Q. The ammeter measures the current I.

The student repeats the experiment with different resistors between P and Q.

It is suggested that I, R_1 and R_2 are related by the equation

$$E = I(R_1 + R_2 + r)$$

where E is the electromotive force (e.m.f.) and r is the internal resistance of the cell.

(a) A graph is plotted of $\frac{1}{I}$ on the y-axis against $(R_1 + R_2)$ on the x-axis.

Determine expressions for the gradient and y-intercept.

gradient = ...

y-intercept = ...

[1]

PapaCambridge

(b) Values of R_1, R_2 and I are given in Table 2.1.

Each resistance value has a percentage uncertainty of ±5%.

Table 2.1

R_1/Ω	R_2/Ω	$(R_1 + R_2)/\Omega$	I/mA	$\frac{1}{I}/\text{A}^{-1}$
22	33		17.2	
22	47		14.2	
22	56		12.8	
33	47		12.4	
33	56		11.4	
47	56		10.1	

Calculate and record values of $(R_1 + R_2)/\Omega$ and $\frac{1}{I}/\text{A}^{-1}$ in Table 2.1.

Include the absolute uncertainties in $(R_1 + R_2)$. [2]

(c) **(i)** Plot a graph of $\frac{1}{I}/\text{A}^{-1}$ against $(R_1 + R_2)/\Omega$.

Include error bars for $(R_1 + R_2)$. [2]

(ii) Draw the straight line of best fit and a worst acceptable straight line on your graph. Both lines should be clearly labelled. [2]

(iii) Determine the gradient of the line of best fit. Include the absolute uncertainty in your answer.

gradient = ... [2]

© UCLES 2021

PapaCambridge

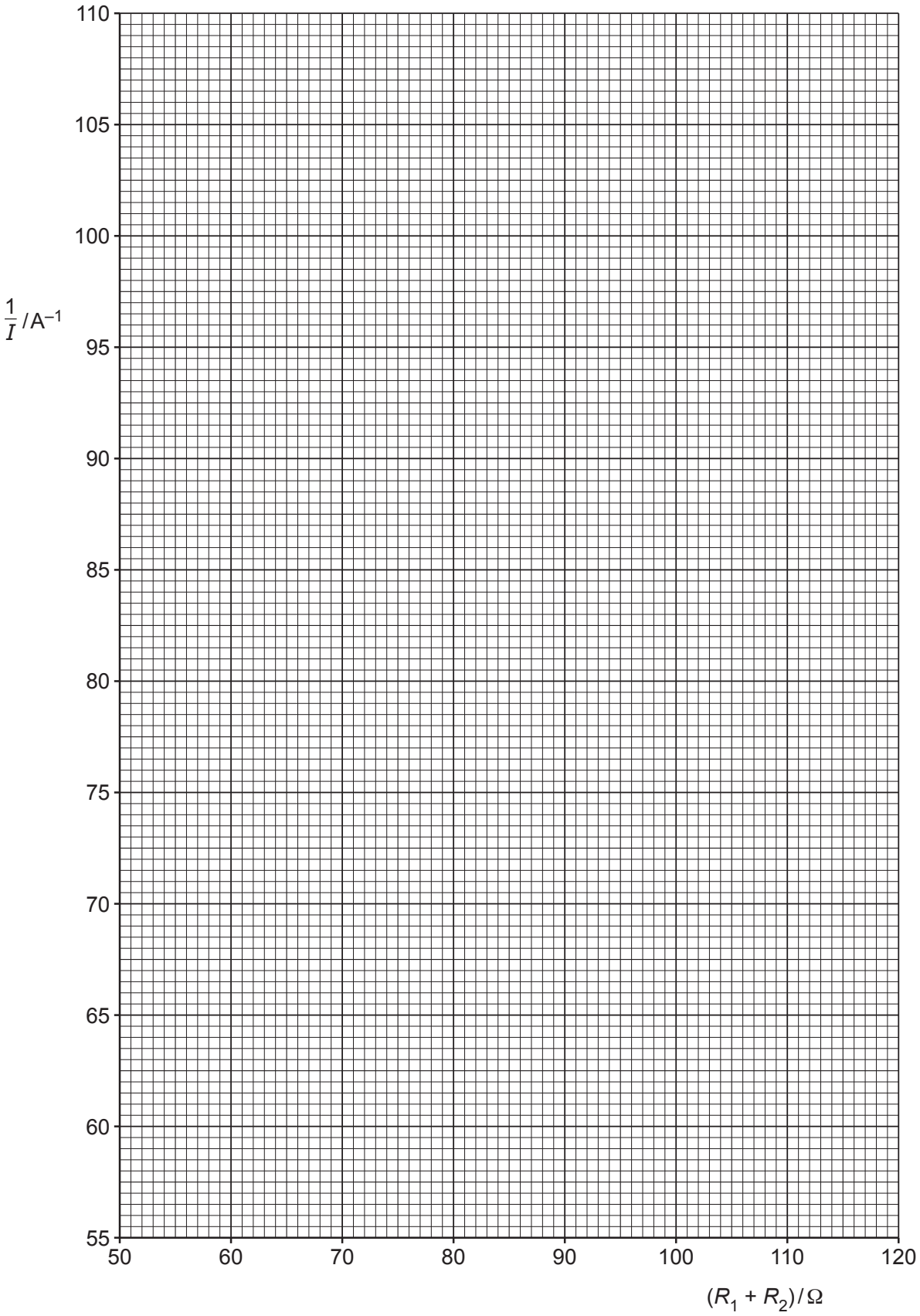

PapaCambridge

(iv) Determine the *y*-intercept of the line of best fit. Include the absolute uncertainty in your answer.

y-intercept = ... [2]

(d) (i) Using your answers to **(a)**, **(c)(iii)** and **(c)(iv)**, determine values of E and r. Include appropriate units.

E = ...

r = ...
[2]

(ii) Determine the absolute uncertainty in E.

absolute uncertainty in E = ... [1]

(e) The experiment is repeated using the same cell. The value of R_1 is 22 Ω. Determine the resistance R_2 that would give a current of 7.5 mA.

R_2 = ... Ω [1]

[Total: 15]

To avoid the issue of disclosure of answer-related information to candidates, all copyright acknowledgements are reproduced online in the Cambridge Assessment International Education Copyright Acknowledgements Booklet. This is produced for each series of examinations and is freely available to download at www.cambridgeinternational.org after the live examination series.

© UCLES 2021

PapaCambridge